

8x

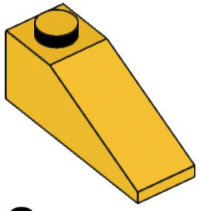

8x

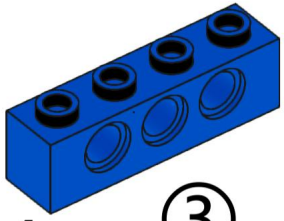

4x ③

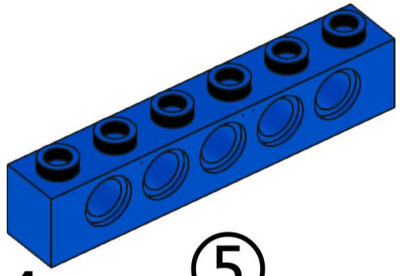

4x ⑤

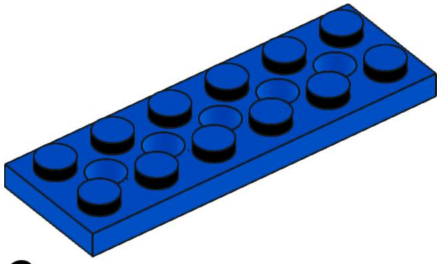

6x

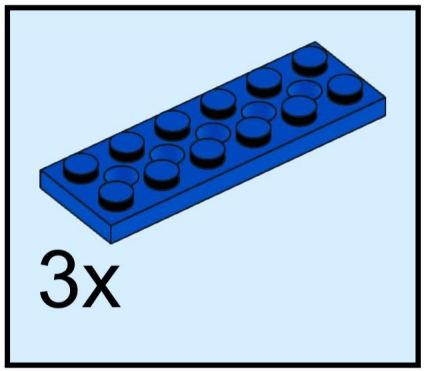

1

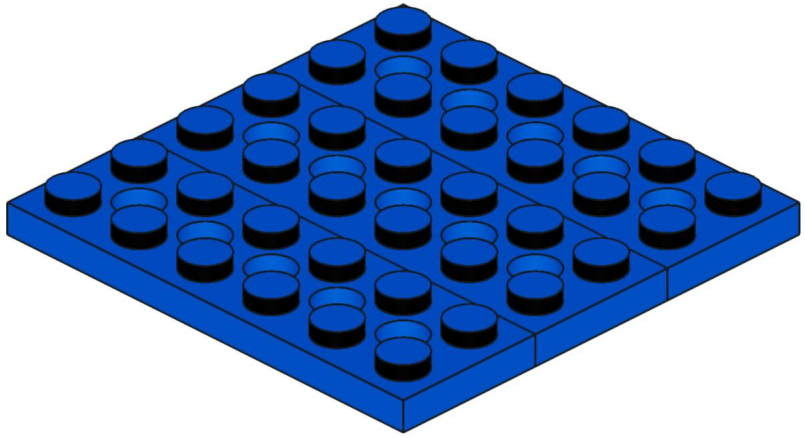

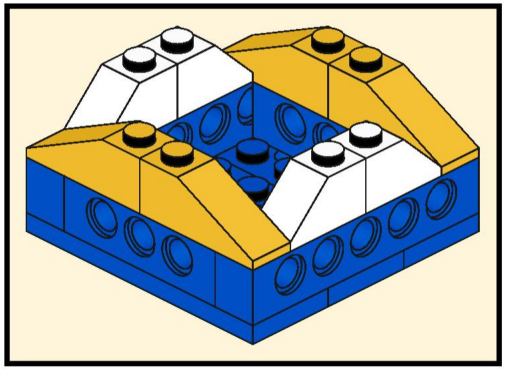

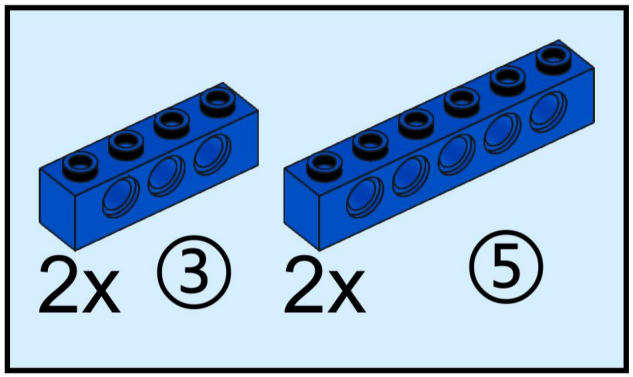
2x ③
2x ⑤

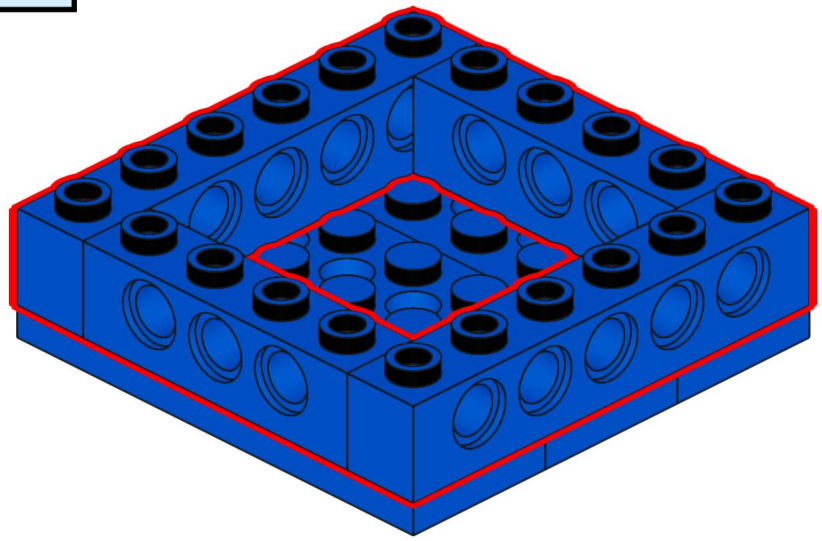

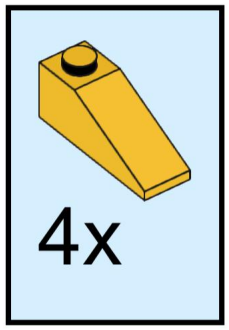
4x

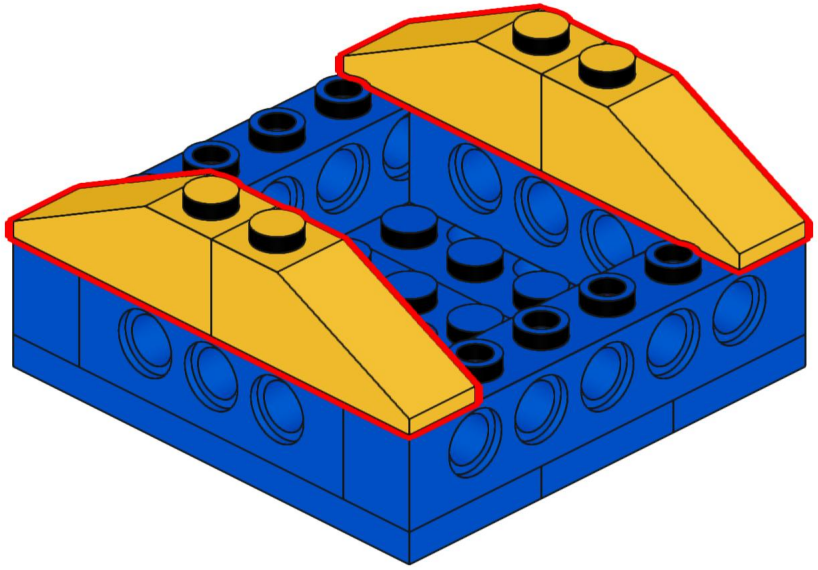

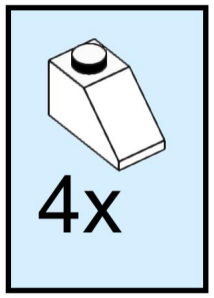
4x

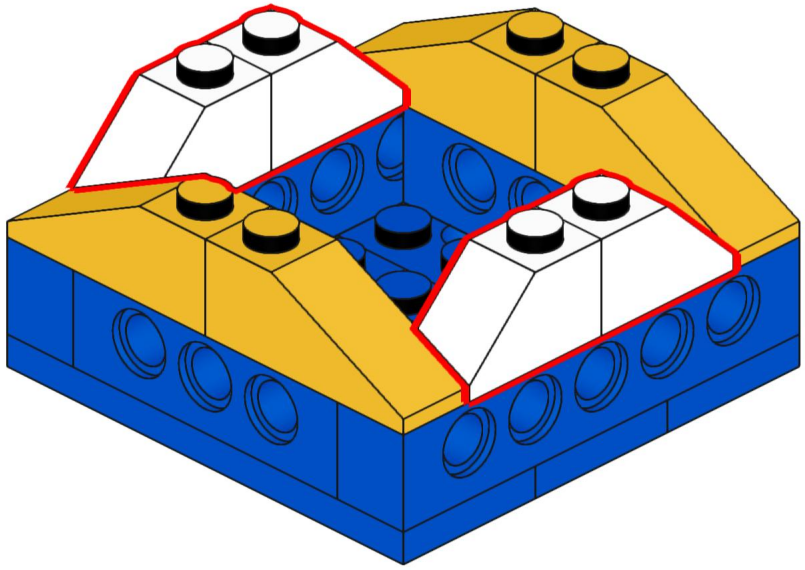

5

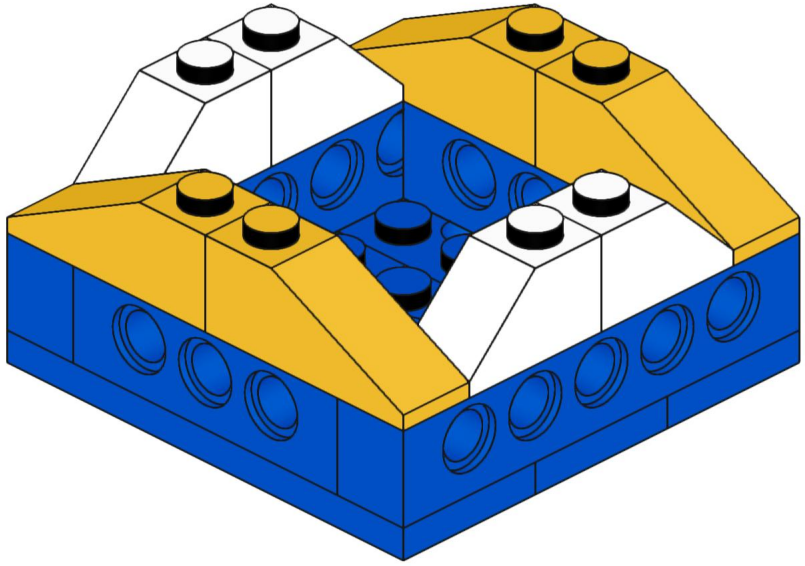

6

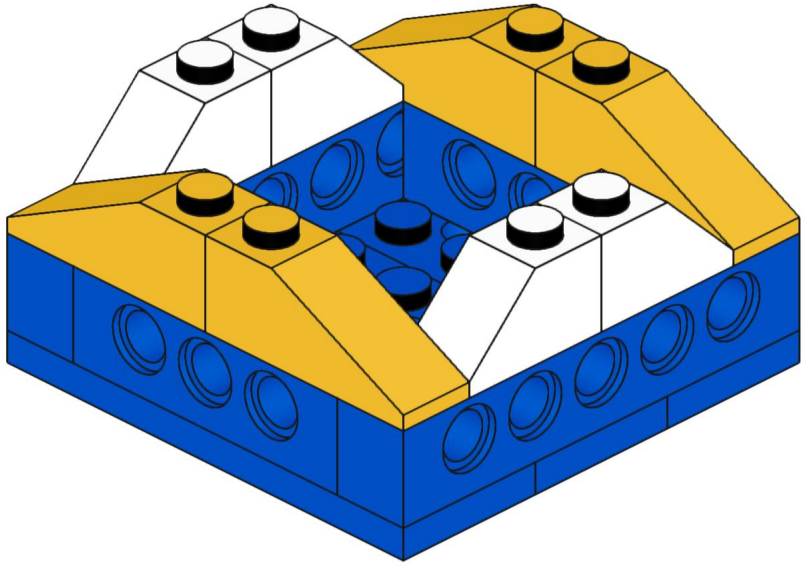

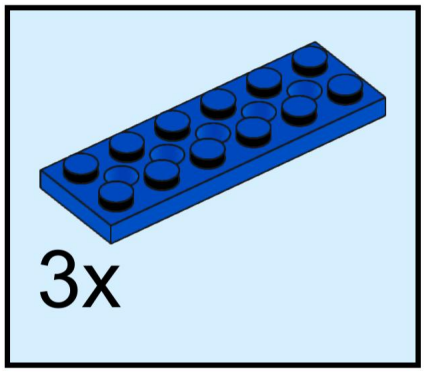
3x

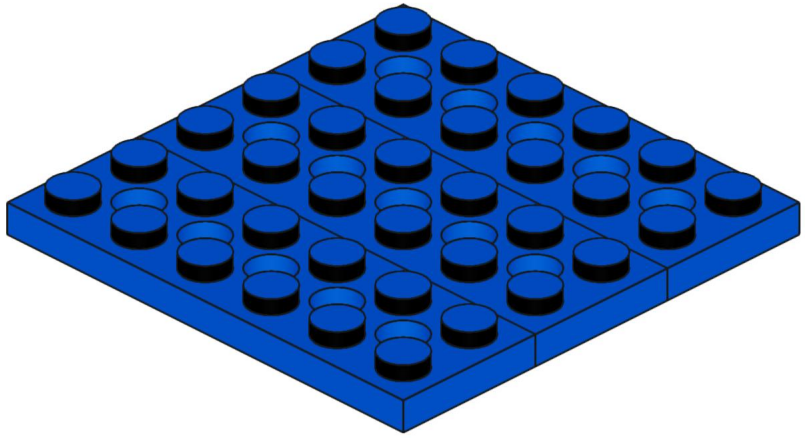

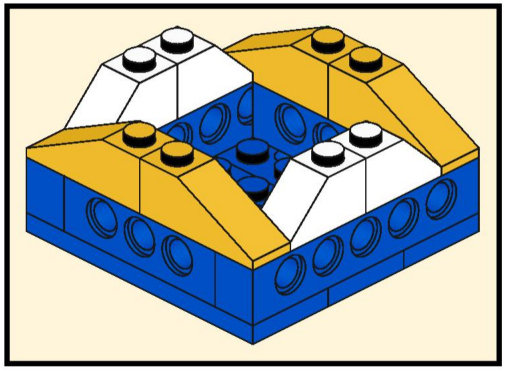

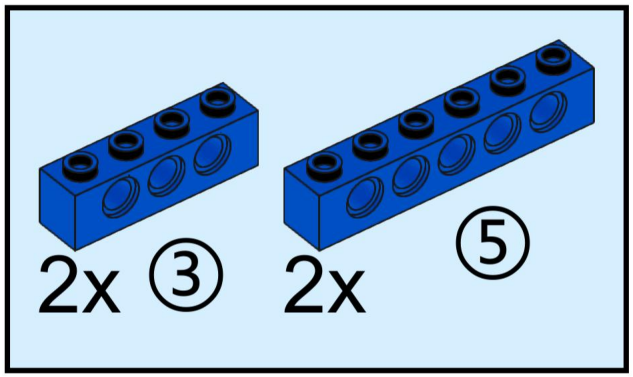
2x ③
2x ⑤

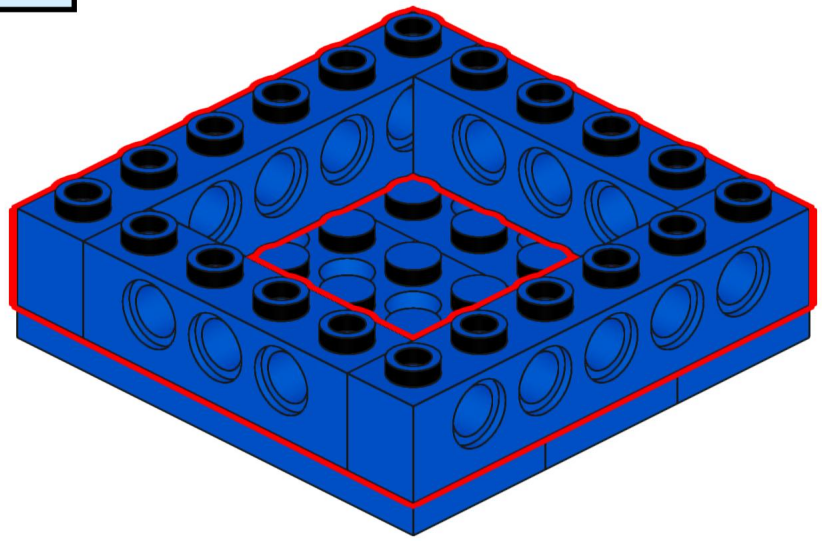

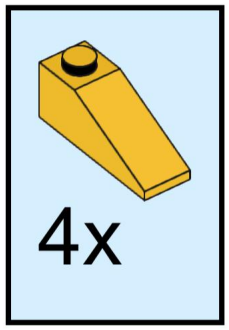
4x

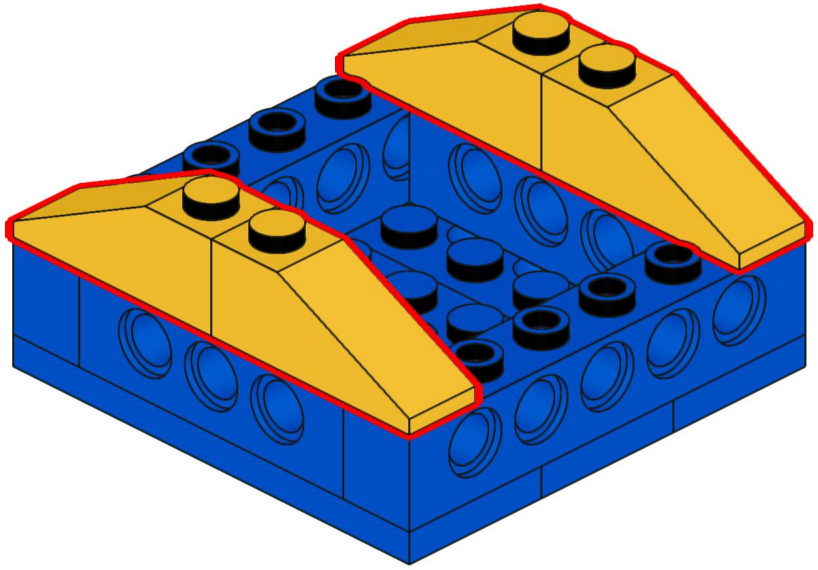

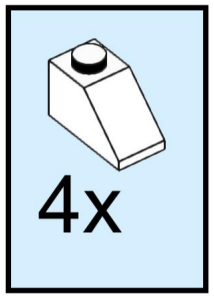
4x

